The Arial Home Initiative

Presented by:

Tom Pirelli, Executive Director, The Arial Foundation

Brian Roehl, Senior, Deerfield High School

2007 *FIRST* Robotics Conference

What Problem Are We Trying to Solve with Our FIRST Engineering Skills?

- The human tragedy of inadequate housing
- Employing the talents of FIRST teams worldwide
- Building high quality, high tech homes in one day
- Building homes the way cars are built
  - Mass produced
  - Standardized parts
  - Robotic manufacturing
  - Volume purchasing

Goal of The Arial Home Initiative

2007 *FIRST* Robotics Conference

Be partially responsible for one million new homes being built for poor families worldwide over the next 10 years.

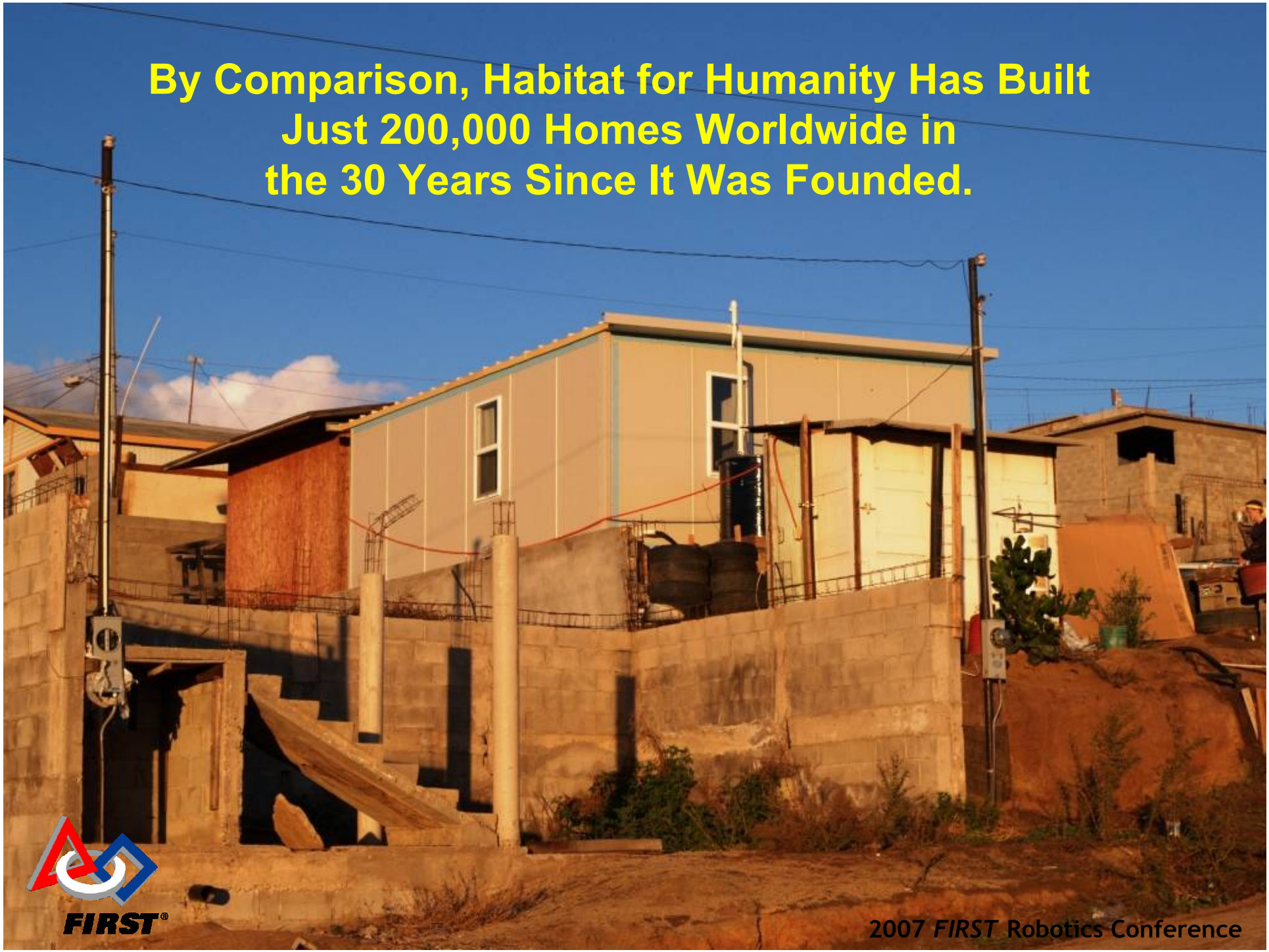
By Comparison, Habitat for Humanity Has Built
Just 200,000 Homes Worldwide in
the 30 Years Since It Was Founded.
FIRST®
2007 *FIRST* Robotics Conference


The U.N. estimates that more than one billion human beings live in houses no better than this one, with no running water or toilet.
One Billion Human Beings
FIRST®
2007 FIRST Robotics Conference


YAMS
YAMS


CALIFORNIA
YAMS

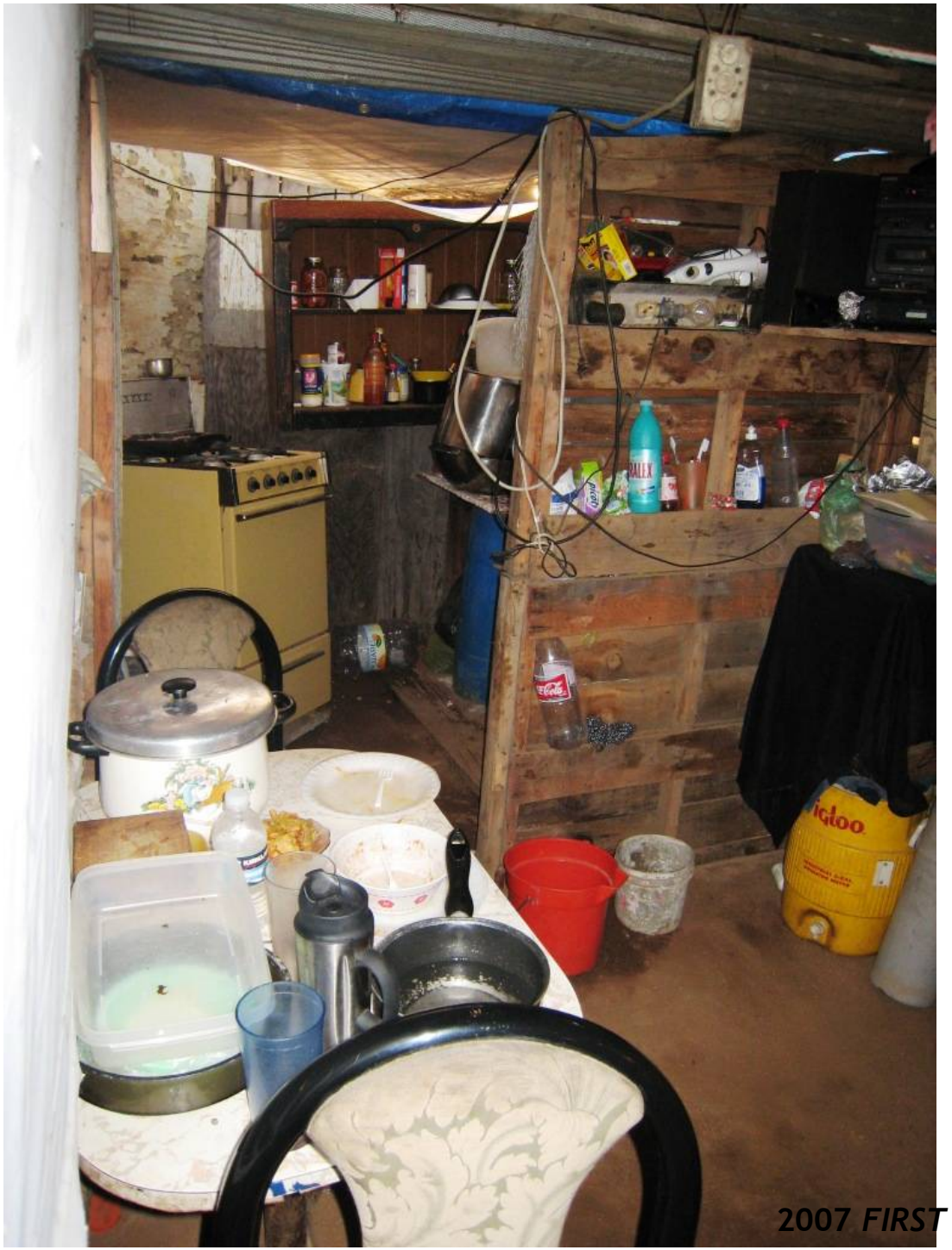
Coca-Cola
Igloo

With an Arial Home Claudia Will Have These Positive Effects

- A Stable Environment
- More Likely to Attend and Stay in School
- Reduced Incidences of Sickness Due to Dirt Floors and Exposure
- Stabilized Emotional Well- Being
- Strengthened Home Life
- Improved Overall Quality of Life

The Deerfield High School FIRST Team That Built the First Two Arial Homes in Ensenada, Mexico on December 16, 2007

Similarities to FIRST Robotics Challenge

- Team work is essential
- Organizational skills are required
- Tight timeframes – one day per house!
- Variety of team roles
- Must learn to use the right tools
- Continuous improvements to the product and the process can be made

Extensions to the original FIRST Robotics Concept

- Adds a Community Service/Humanitarian aspect component
- Building homes for families has greater appeal to many girls than building robots
- Result of the work effort is long lasting – the homes will be habitable for 50 – 100 years

Front Wall

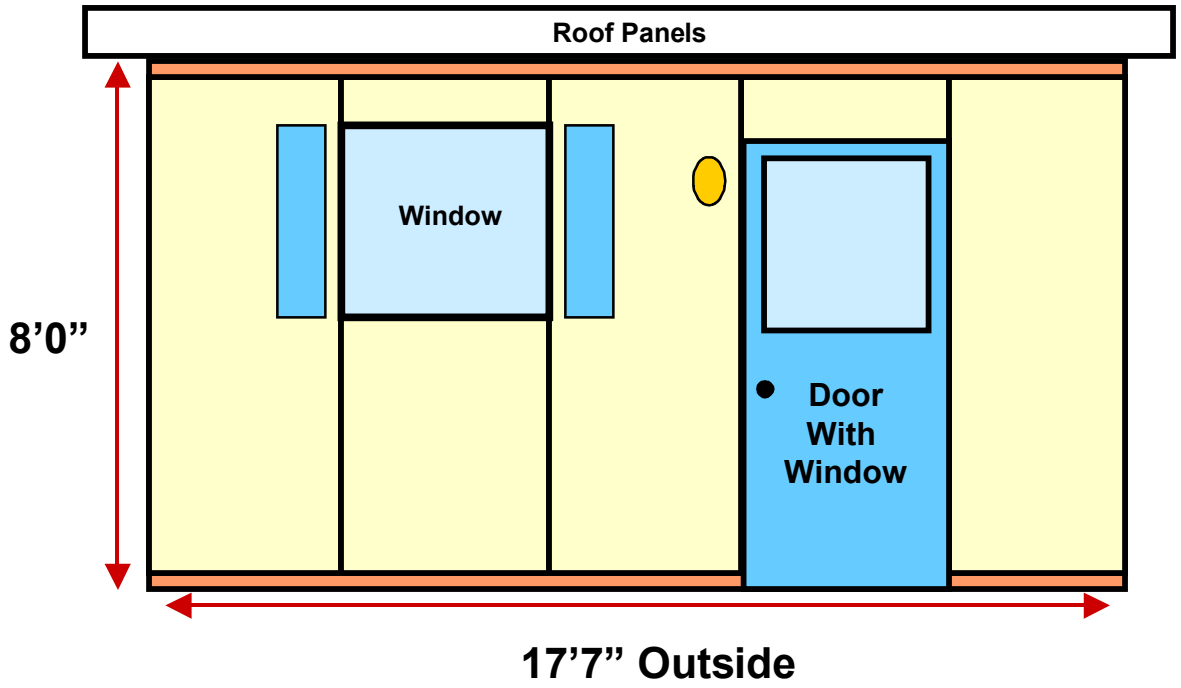

Decorative shutters will be put around the front window

Right Side View Showing Middle Wall and Loft

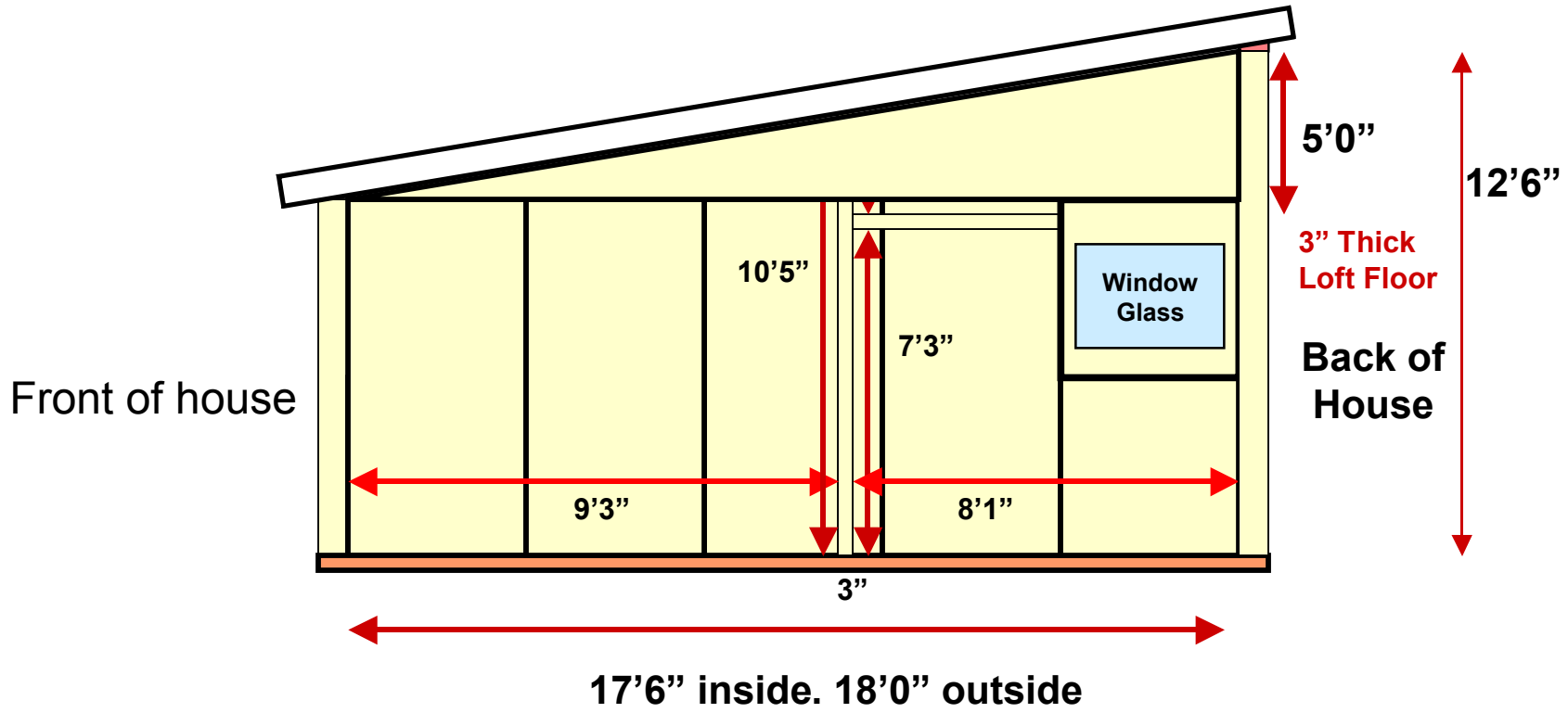

The loft floor does not cover the window glass. The diagrams show the entire window panel, including frames and channels, the glass is a smaller area.

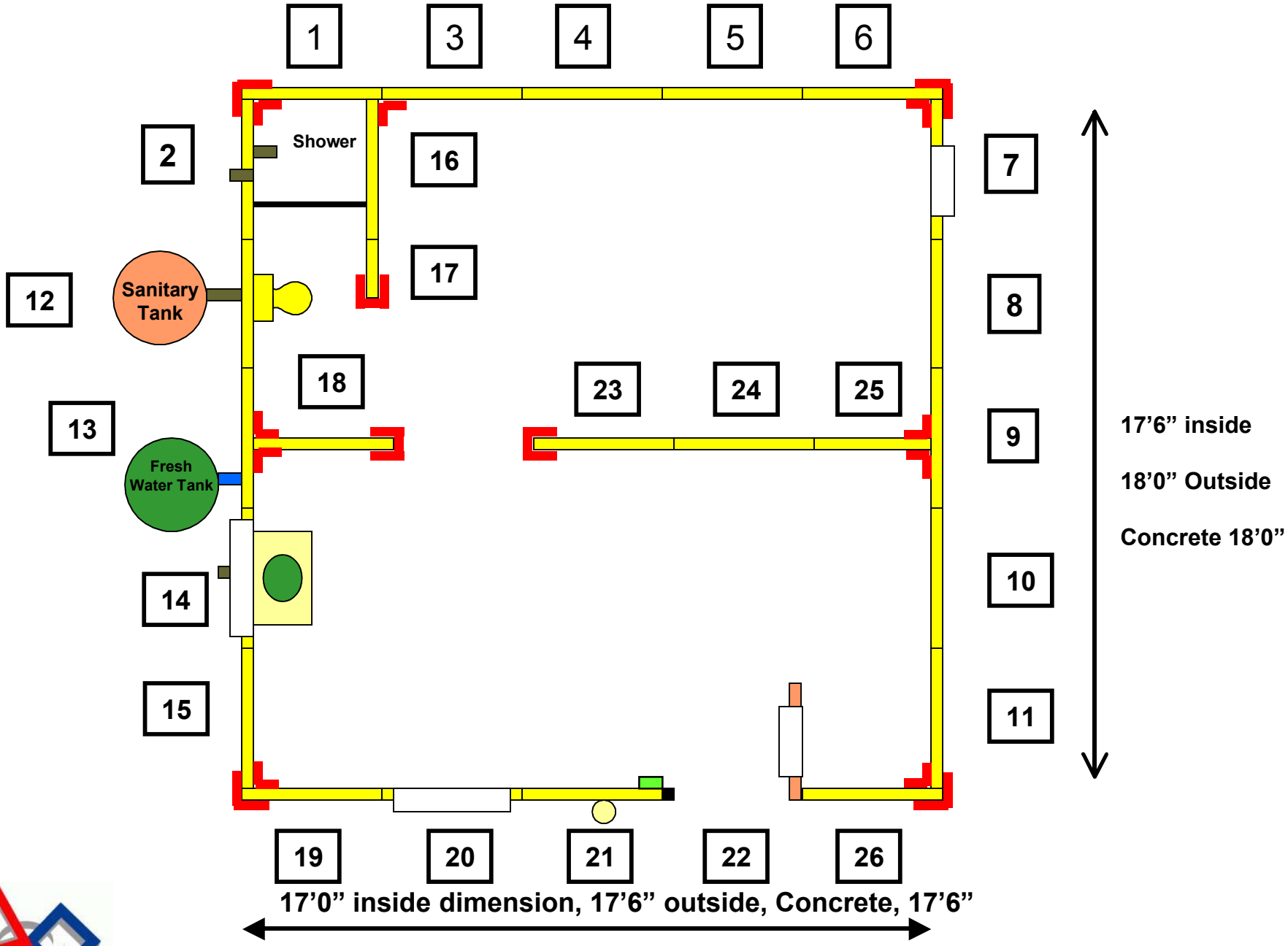

Pre-Mounted U Channels and L Channels

The Panels Arrive on Site Via a Flat Bed Trailer

HouseKea....

Simple pictorial instructions so a family and their friends can build an Arial Home.

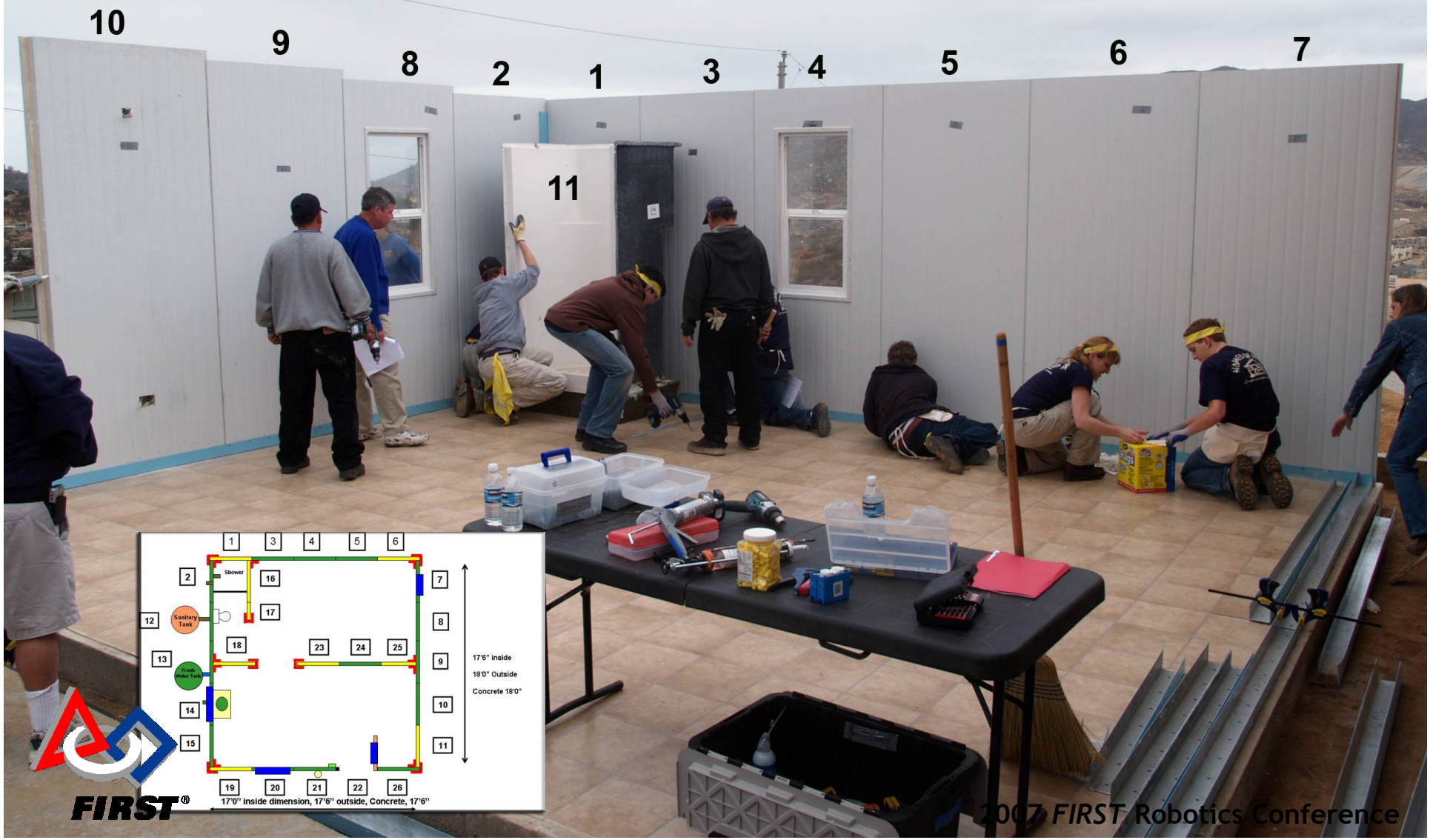

A Battery Powered Electric Screw Gun is the Only Power Tool Needed

The Floor Channels are Screwed into the Concrete Pad, Through the Vinyl Sheet Flooring

Arial Home J Channels to Anchor Wall to Concrete Base

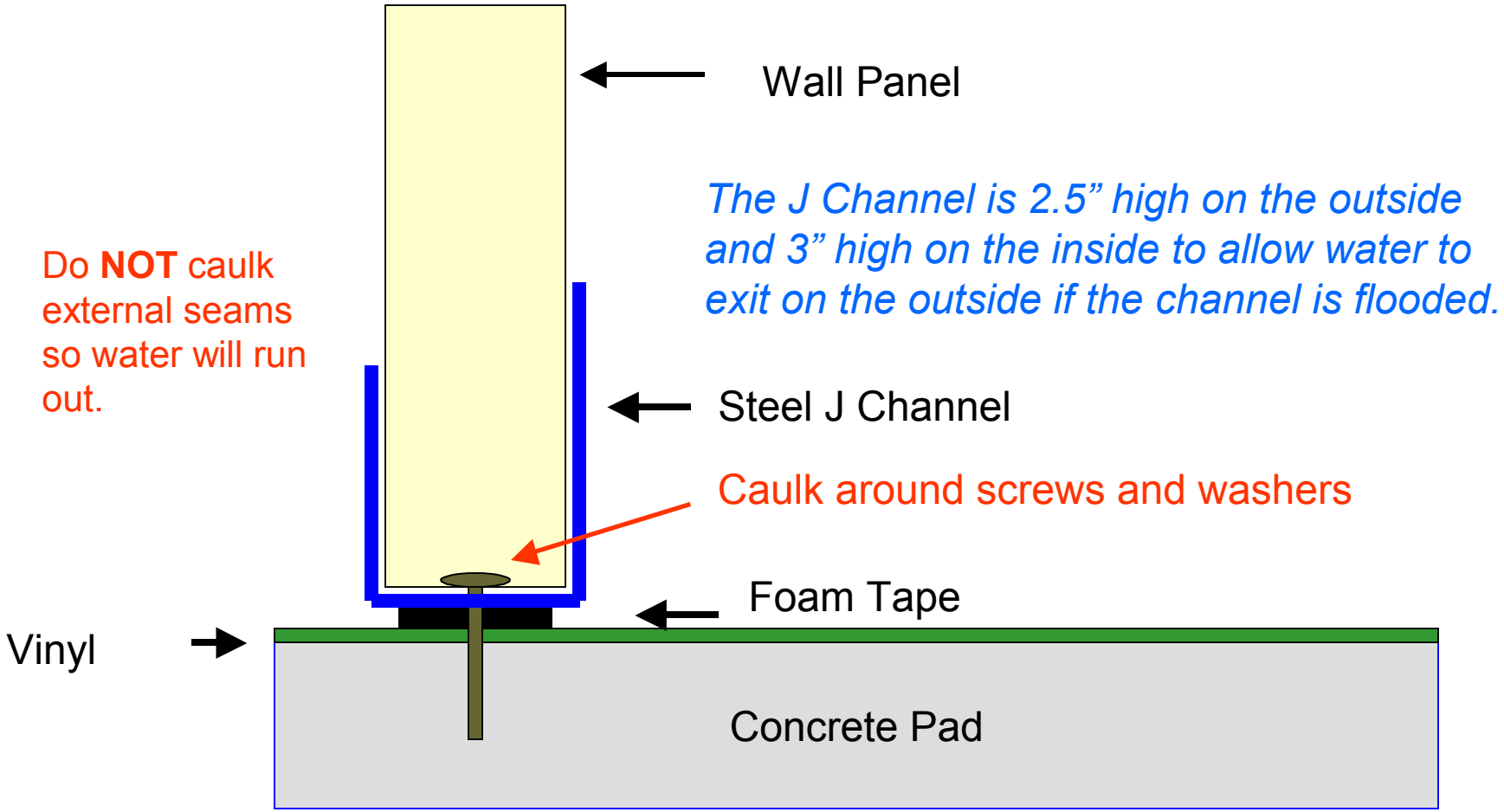

Vinyl flooring is glued to the concrete pad as the first step.
Foam tape is put under the J channel as a water barrier
J Channels are screwed down through the linoleum.

The First Wall Panel Goes Up Inside the Floor Channels

The Tongue and Groove Panels Fit Together Like LEGOS

The First Roof Panel is Eased into Position

Boys Build Houses

Girls Build Homes

Advantages of the Arial Home Design

- Will last 50+ years
- Low maintenance, high strength components
- Fireproof, waterproof, termite proof
- Larger homes hold more of the extended family
- Use local labor for manufacturing the components
- No cutting or waste materials due to factory construction to precise dimensions

The Key to Accomplishing the Goal

Build Panel Manufacturing Plants Close to the House Building Sites Around the World.

We Start With Coils of Pre-Painted Galvanized Steel

The Steel is Unrolled Into Flat Sheets, Bent into the Right Shape, Then Cut To the Right Lengths

Example of a Roll Forming Machine Used to Bend the Sheet Metal Into the Right Shape for the Panels

First Arial Home Self Manufactured Metal Foam Wall Panel
March 23, 2007 at Sealed Air in Chicago

Polyurethane Foam Applicator Nozzle

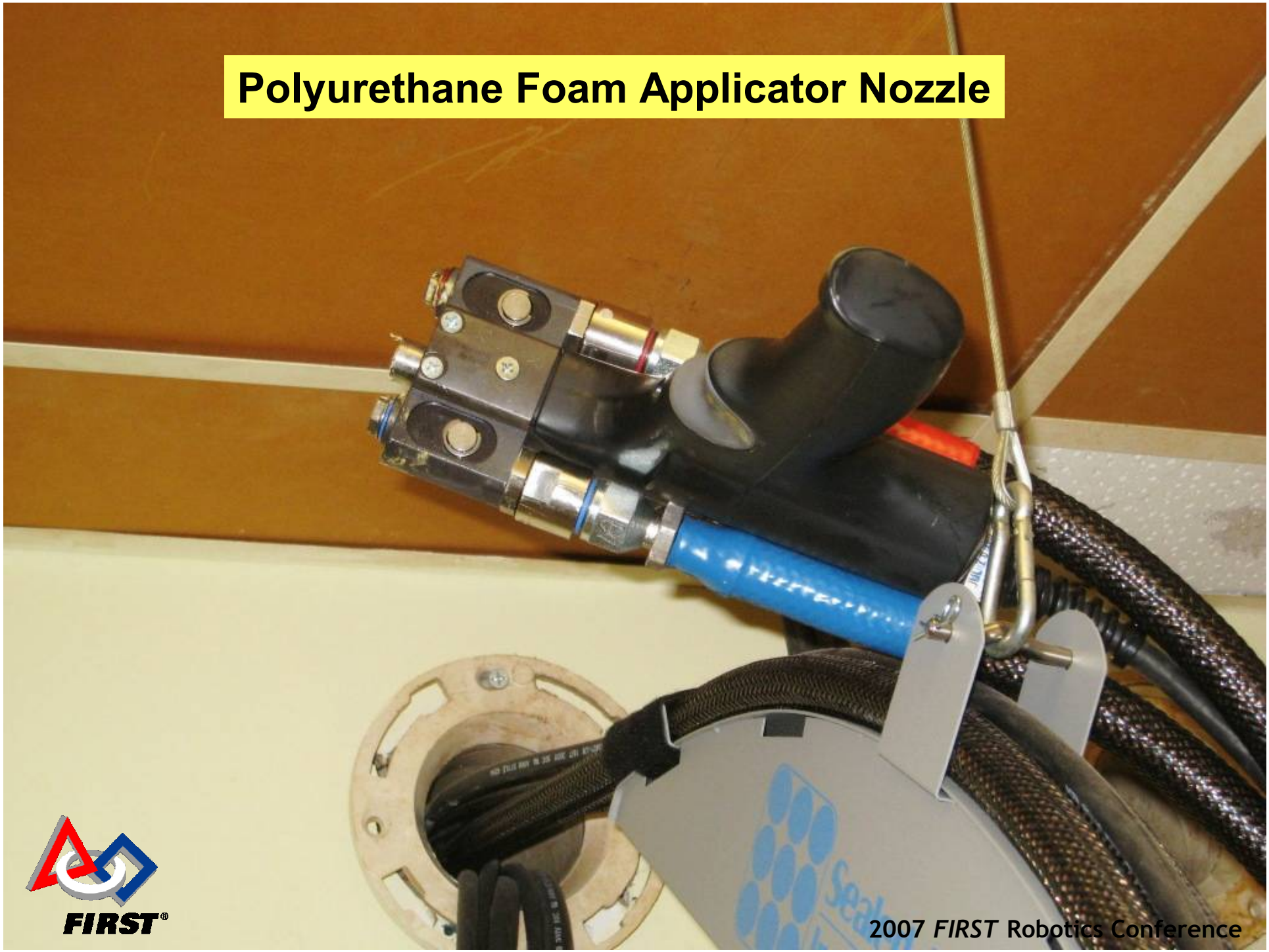

Nozzle Spraying Liquid Polyurethane into Form

First Panel Undergoing Strength Test on March 26, 2007, Successfully Holding 800+ Pounds

Self Manufactured Metal/Foam Wall Panels

We use 24 gauge sheet, pre-painted galvanized steel. It is originally 48” wide, but the bends reduce the net length to 42”.

The lengths vary between 8’ and 12’6” (for the back wall)

A three inch thick layer of polyurethane foam is poured between the two metal sheets in a form.

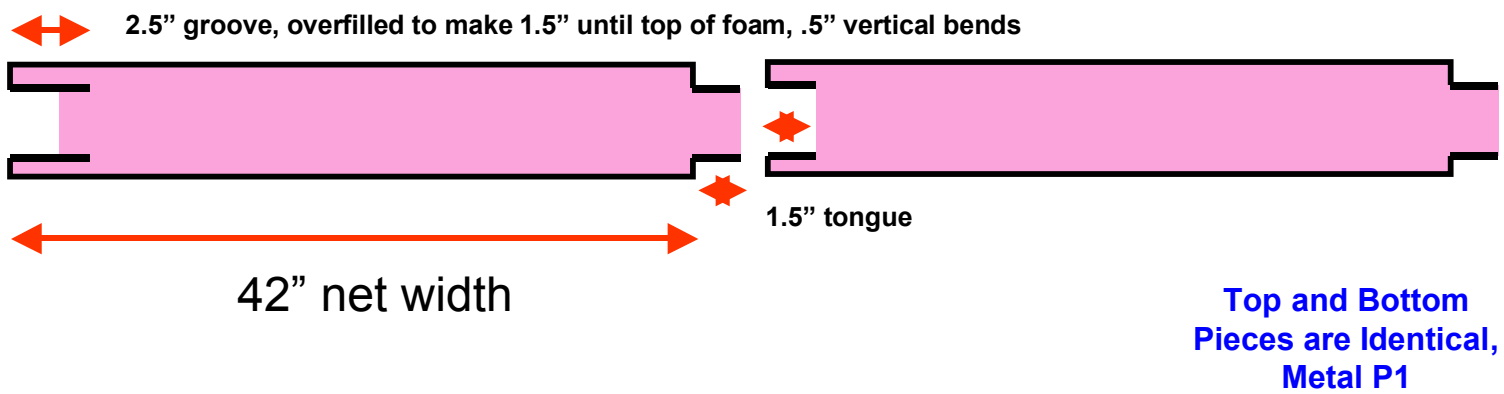

Top and Bottom Pieces are Identical, Metal P1

Illustration of an Arial Home Roof Panel

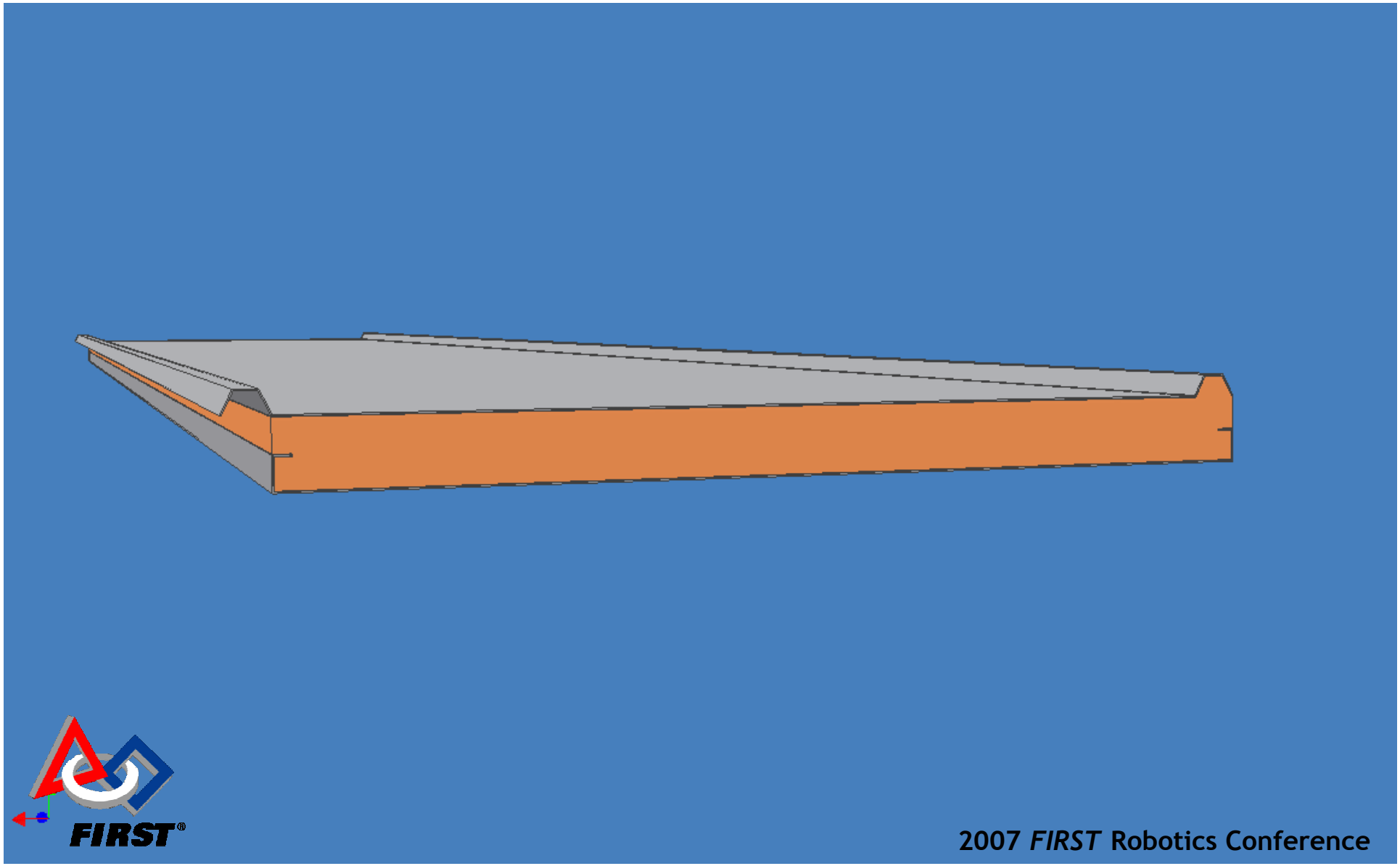

Arial Home Panel Manufacturing Process

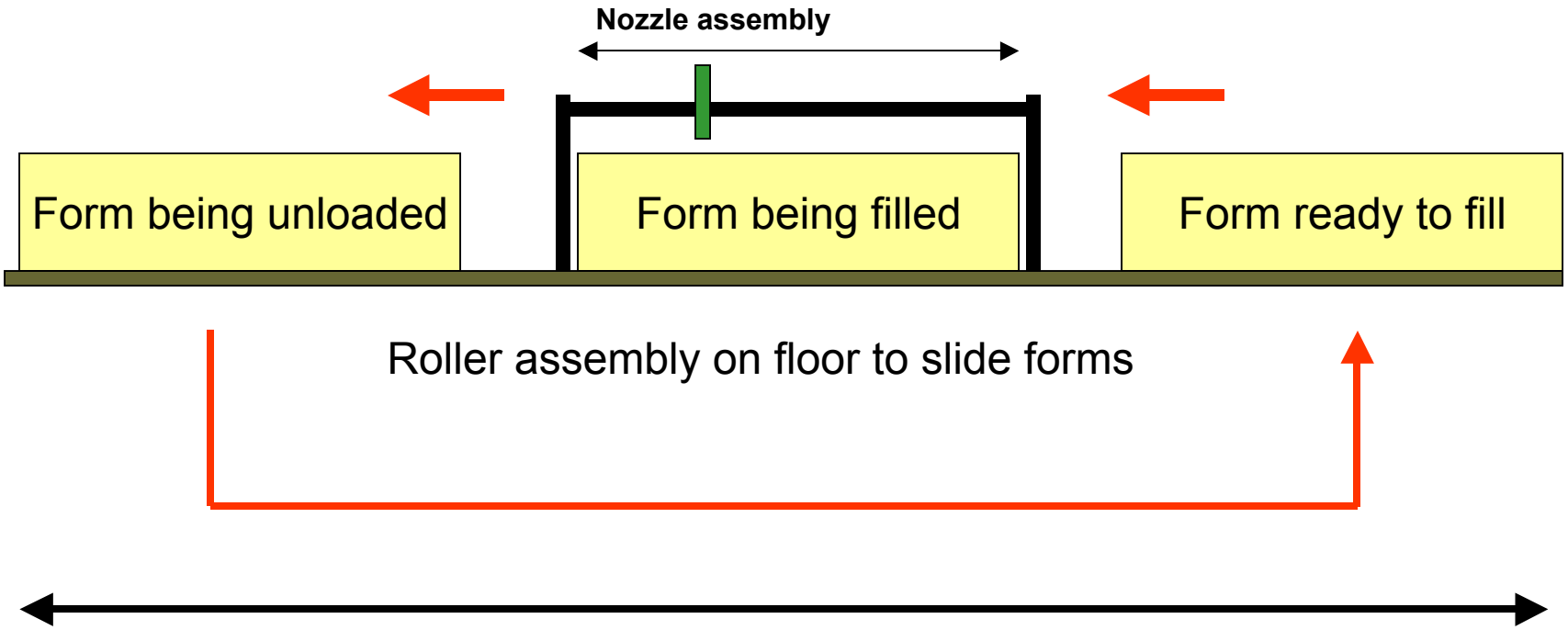

Approximately 70 feet in total roller length

Schematic of a Panel Form With a Hinged Wall to Provide Easy Access to the Inside

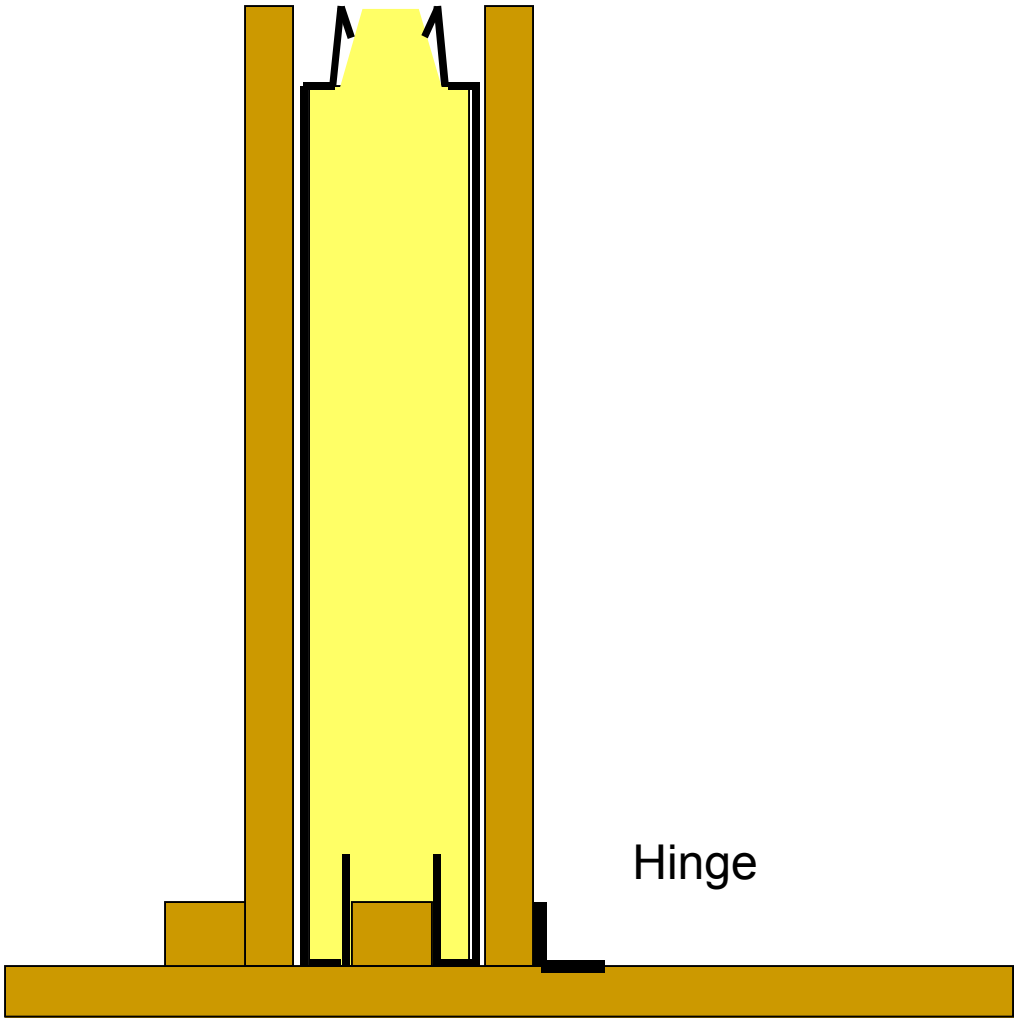

Robotic System for Moving the Foam Nozzle

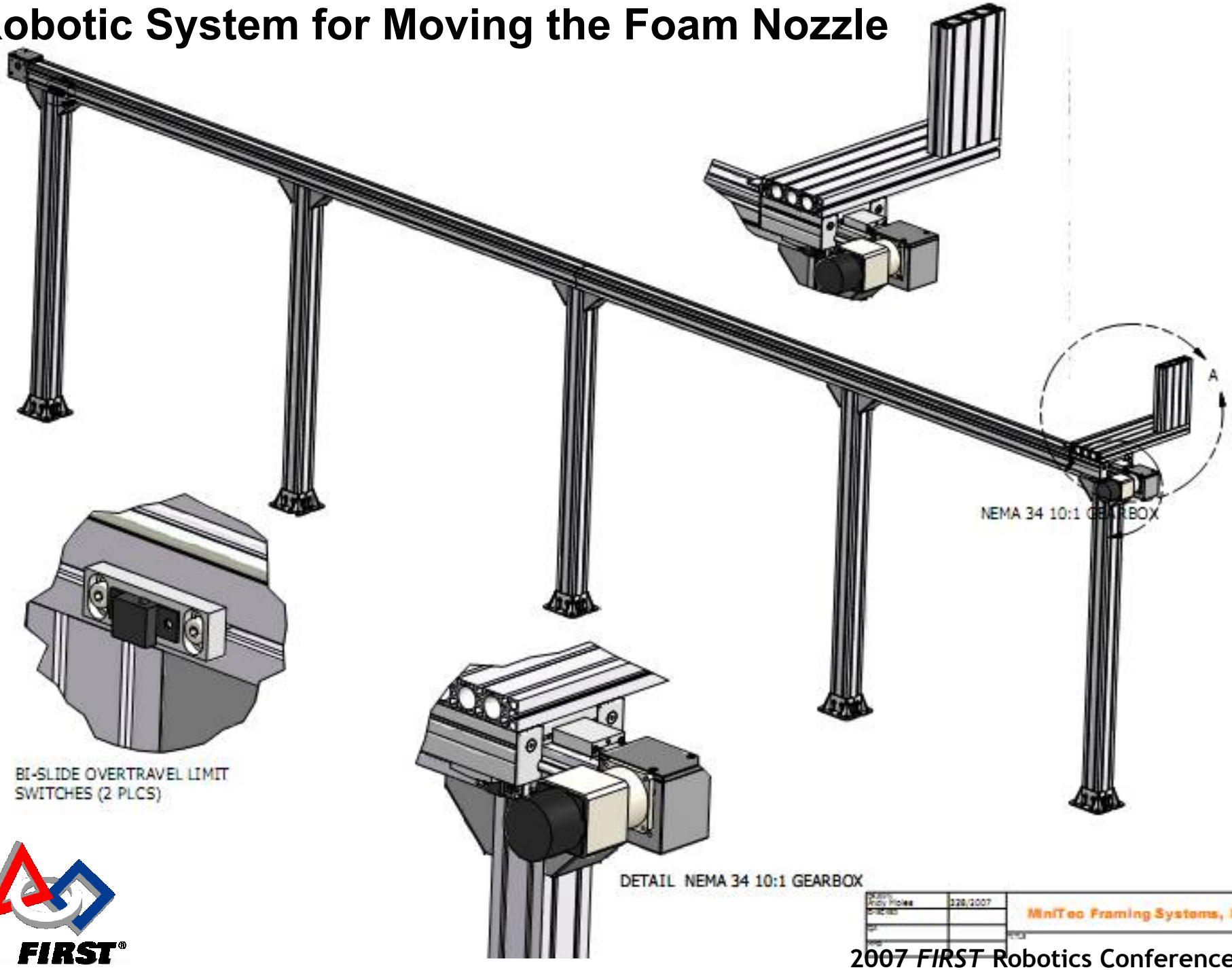

Side View of Robotic System for Foam Application

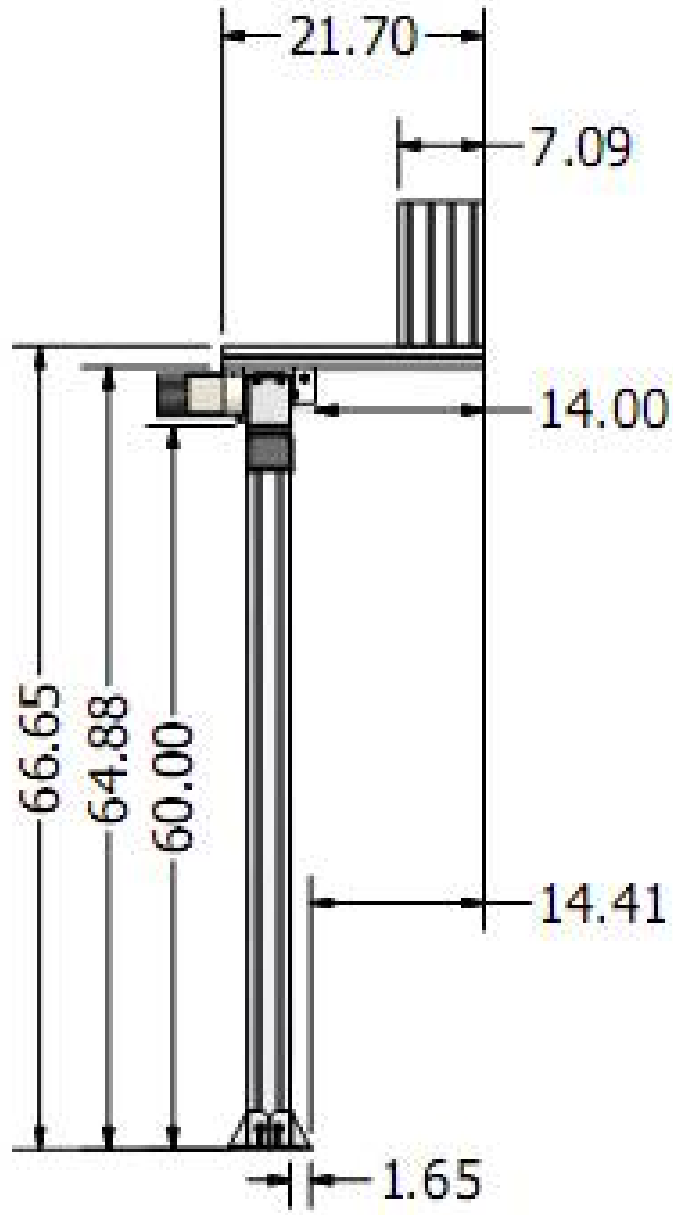

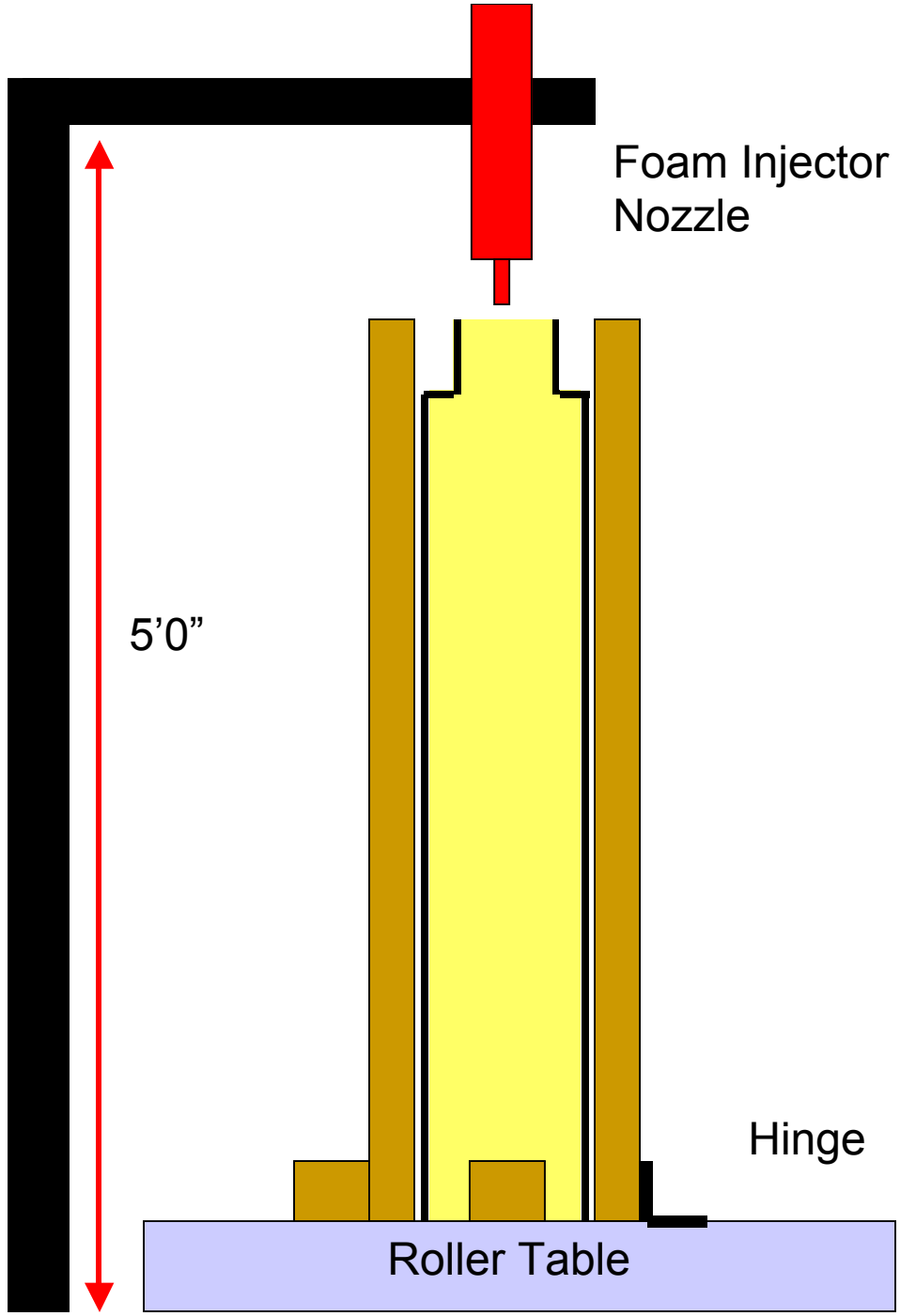

Side View Schematic of a panel form with a hinged wall to provide easy access to the inside.

Schematic of Foam Nozzle Component Array

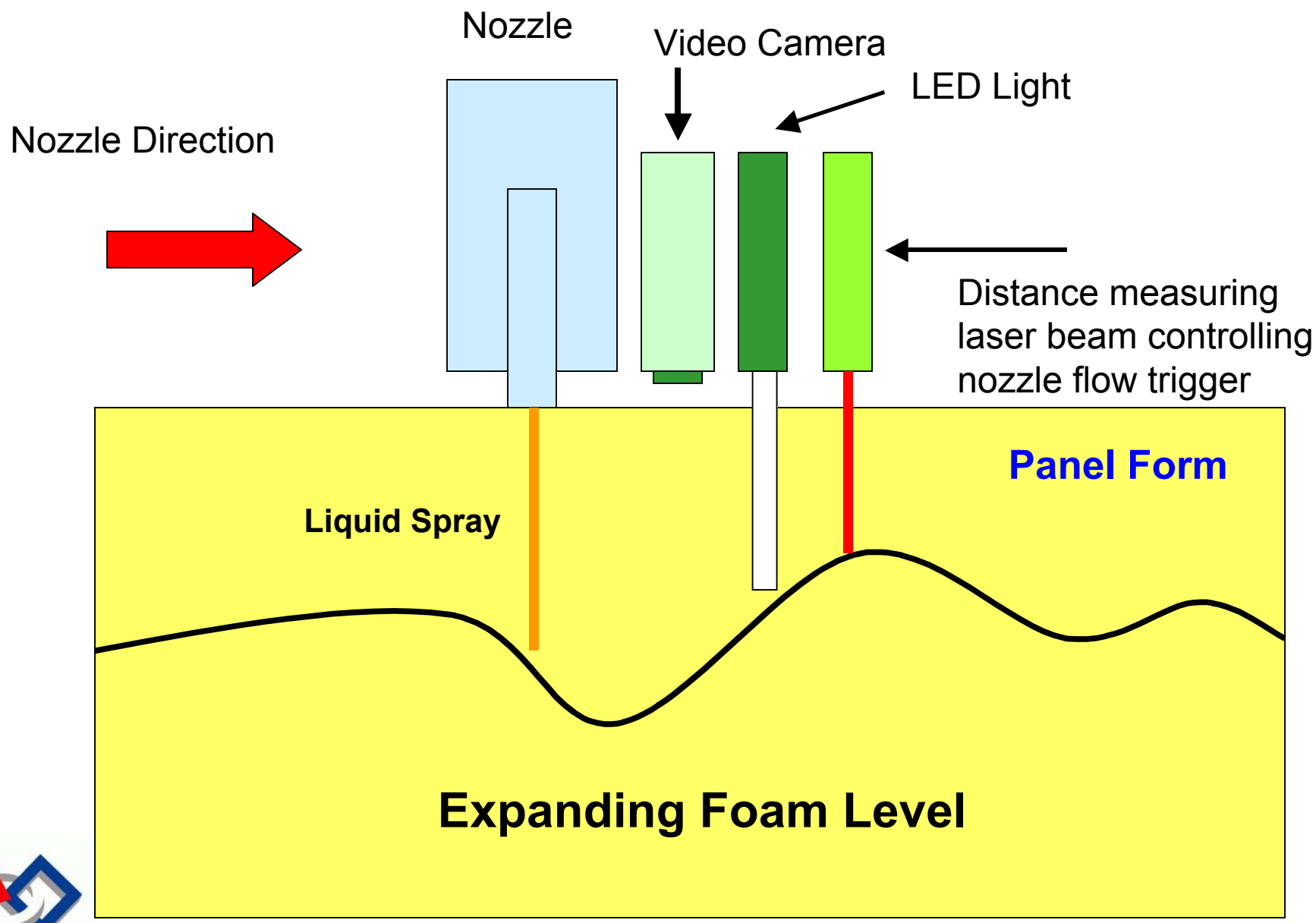

Solar Powered Shed at Deerfield High School to Test Electrical Systems

Solar Powered Scoreboard at Deerfield High School

Brian and Lawry Mounting PV Panels on the Roof

Batteries (16) and Inverter Inside the Shed

Next Generation of Residential LED Lights

Arial Home Plumbing with Expansion Tank and Pressure Switch

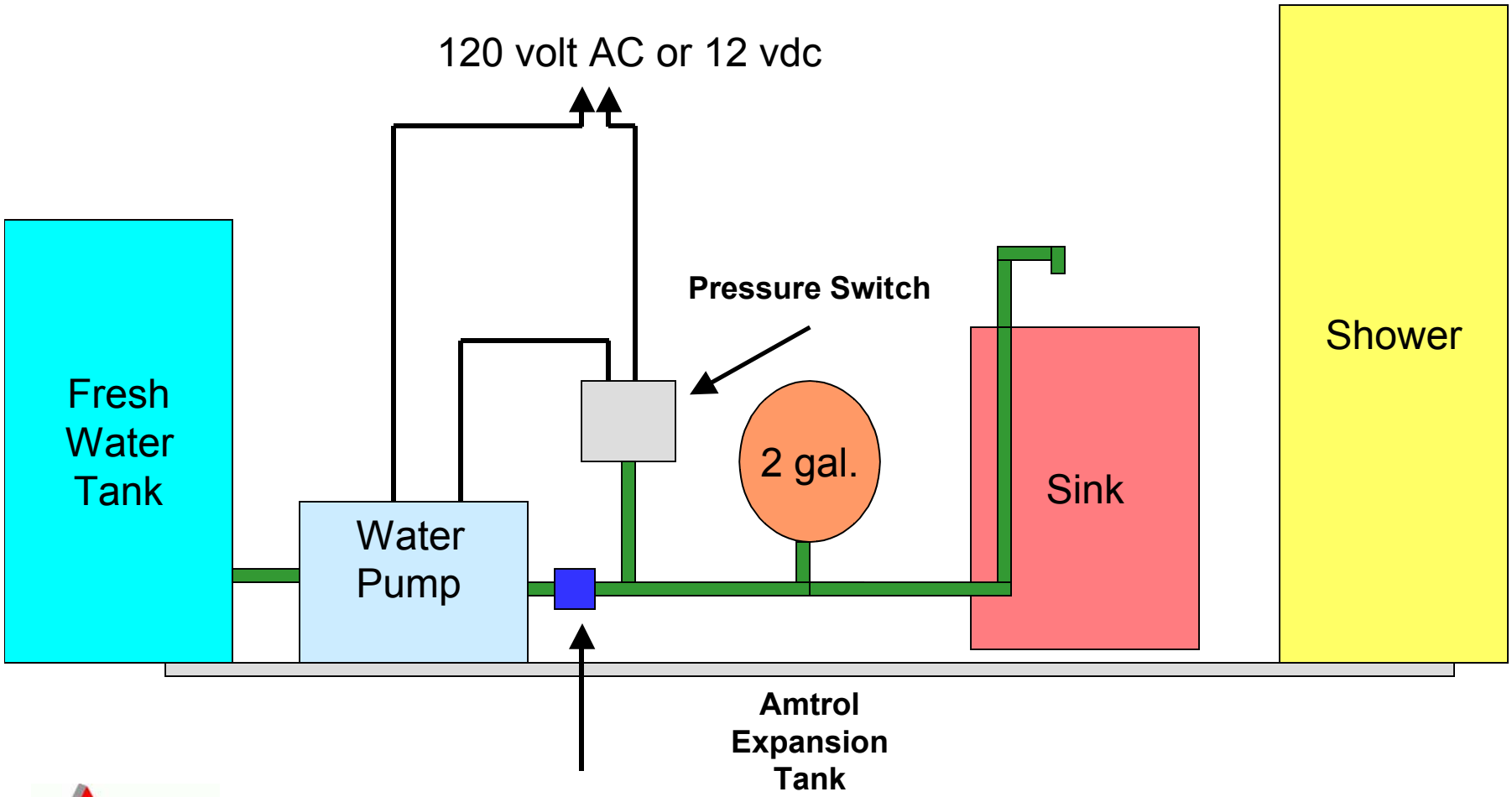

Backflow check valve, spring loaded

Fresh Water Tank, 110 Gallons, Filled By Government Water Trucks

Sanitary Waste Tank, 150 Gallons, Emptied By Port-a-Potty Service

An Arial Home Bathroom

A little cramped, but very functional

Arial Home Rain Water Recycling System

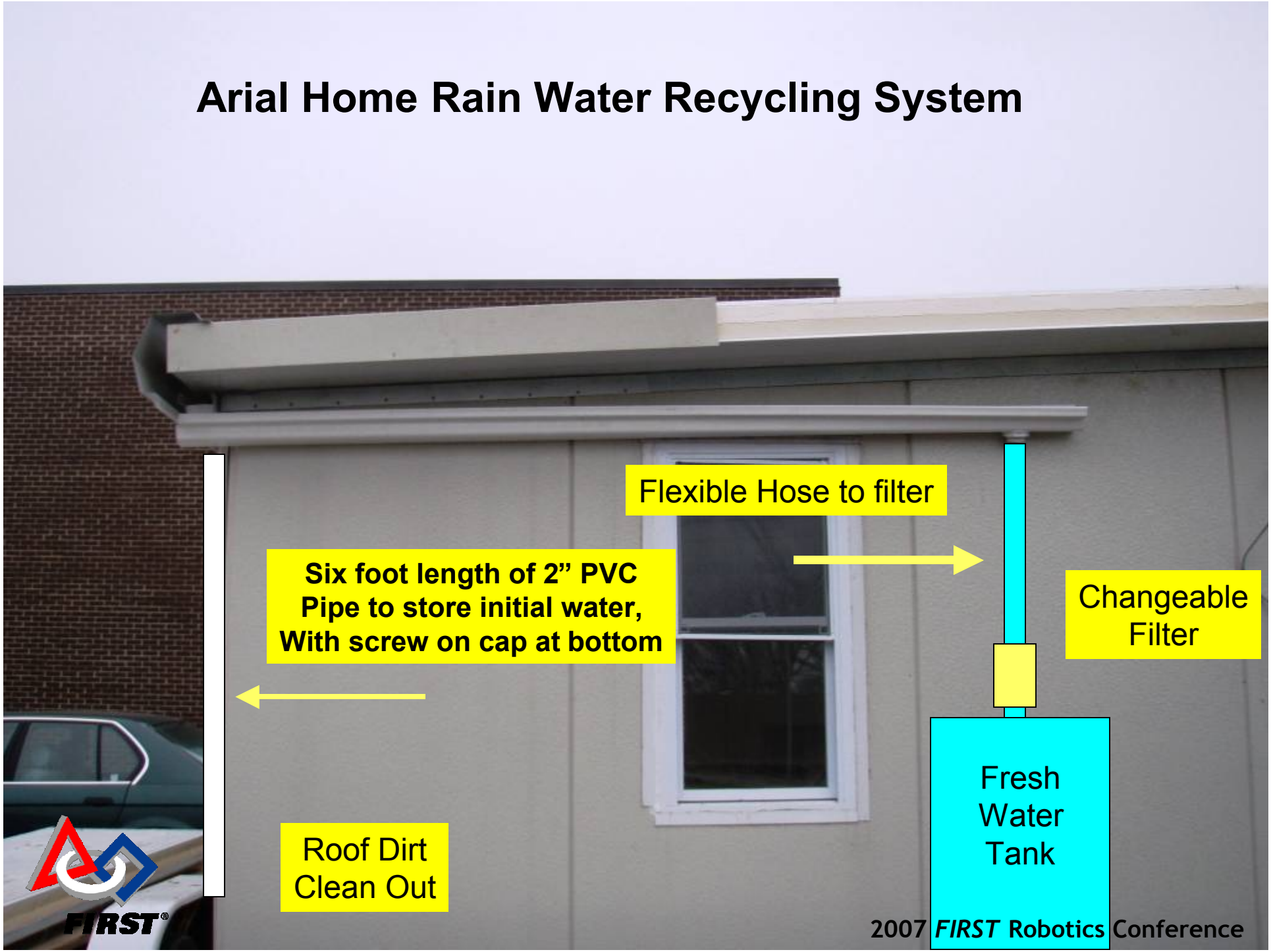

A Finished Arial Home - In One Day!

Arial Home Costs

- Basic house materials: panels, windows, door, channels, etc., approximately $7,000
- Cost of fresh water system, sanitary waste system, sink, toilet, shower: $2,500
- Solar power, self contained electrical system with lead acid batteries and LED lights: $1,500

Call to Action for FIRST Teams

- Each FIRST Team raises the funds and builds one Arial Home per year for a poor family somewhere in the world
- This would result in more than 1,000 new homes per year

For Information on Upcoming Arial Home Building Trips

- Visit the Arial Home Initiative web site at: www.arialhome.org

- Send an email to Tom Pirelli, Executive Director of The Arial Foundation at: tom.pirelli@arialhome.org